GOING PLACES

Model A Restorers Club - Model A Ford Club of America
Columbus, Indiana

Columbus MARC Region Since 1964, MAFCA Chapter since 2009

www.modelacolumbus.org

July 2020 Edition

Upcoming Events

July 11—Picnic at Brown County State Park (Lawson/Sutton)

July 22—Dine at Ford Garage (Lawson)

July 31-Aug 1—Clifty Falls Tour Madison, IN (Sutton)

Events are subject to change quickly. Please contact the tour leader prior to event to confirm.

"I have not failed, but found 1000 ways to not make a light bulb."

- Thomas Edison

President's Report

By Ron Lawson

Hello Membership!

Finally, on July 11, we will enjoy our first club tour; the *Picnic at Brown County State Park*! Join us at our annual Brown County picnic at the Brown County State Park Walnut Shelter house. Bring your favorite covered dish, either a side dish or a dessert. The club will provide meat and drinks. We will eat at 12:00 noon. Bring folding chairs for your comfort.

Then on July 22, we will *Dine at the Ford Garage* at 13193 Levinson Ln #100, Noblesville, IN 46060. This is on a Wednesday. We will be leaving Marathon Gas Station at the junction of 25th street, HWY 46, HWY 9 at 10:30 AM. The Marathon Gas stations address is 2650 IN-9, Columbus, IN 47203, if you want to put it into your GPS. The Ford Garage does not take reservations, it is first come first serve. Call me (812) 343-2434 and let me know if you are coming.

Also, MARC your calendar June 7 to June 11, 2021 for the MARC National Meet "new" date at Oshkosh WI. Even though the event will be in 2021, it still will be considered the *'Focus on 2020 in Oshkosh'* meet. All merchandise will reflect the 2020 meet. The Nickle "A" Region and MARC have a lot of money invested in the 2020 meet. MARC trusts the membership will understand. Reservations at the Best Western host hotel will begin on August 20th, 2020 at noon. Call (920) 230-1900 and mention MARC. Meet Registration form will be in the Jan/Feb 2021 MARC news.

Did you know that every tire has a built-in GPS chip so that you can be located on the new 5G networks? If you do not want to be tracked, cut off the little antennae that sticks out!!

See ya on the Road— ***Ron***

FROM THE EDITOR

Well, it finally happened. Hell froze over. In 65 years, neither rain, snow, wind, cold, hot, mud, or any other natural or man made disaster (3 mile island, 9/11) could shutdown the Hershey Swap Meet. But an invisible virus can. While this decision will be hotly discussed for years to come, erring on the side of caution is best in this case. With crowds in excess of 200,000 over a 4 day period, contact tracing would be impossible.

My family started going in the early 1970's. Dad had recently gotten into the hobby after restoring the Model A that I look after today. We had a small stand next to other friends and club members where Dad sold the stuff he did not use during in the restoration. That soon turned into parts that he bought at Hershey only to find out later they were not quite right. I do have memories of slogging through the mud, but never recall our car needing to be towed. Still in elementary school, I have a specific memory of writing a report about the Olympic games in ancient Greece while manning the stand when Dad and Mom were wandering the fields. Since our parts were usually misfits, sales were slow, grateful to cover the space rent by the end of the week.

Late '70's, my brother and I started selling car adds from old Saturday Evening Post magazines. Dad was given a stack of these for free by a friend. We spend hours carefully dissecting the ad from the magazine then stuffing in clear gallon baggies. Dollar an ad was the going rate. Dad made us a little display stand with a framed ad to demonstrate the possibilities. The popular cars sold well for a few years, then the business started to sputter. Nobody seemed interested in 'modern' 60's T-birds or Chevys. I still have a small stack of these. Still priced at $1 a piece. A little banged up after moving back and forth so many years. Hopefully I'll sell out one day, then retire!

Tim Diehn, Newsletter Editor

It's Still On: Clifty Falls Tour Madison, IN July 31 - August 1

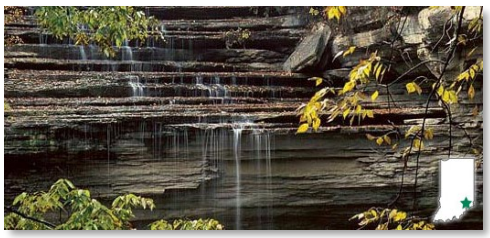

For those going on the Clifty Falls tour, remember to book your room. Call them direct at 812 265 4135 following the prompts for reservations, then use the code "0731cm" . If you reserved a room and need to cancel, do so by July 26. We will leave on the 31st at 9:30 AM at the Circle K on the corner of Rt 7 and 31 just outside of Columbus. Anyone south of there we will pick up on the way. Please let Phil know if you are going so we don't leave anyone behind. Call 812 336 8672 or email pgsutton@indiana.edu.

-Phil Sutton

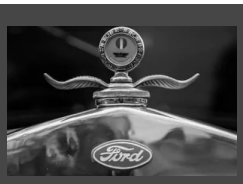

What Is It??

Answer to last Month's Challenge

Front Hub Bearing Retainer Washer

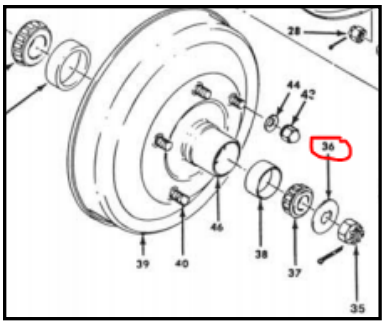

Next Month's Challenge

What is it and where is it used?

The October Blue Ridge Parkway Tour Is Now Set!

Leave **October 13 Tuesday** and drive to Gallipolis Ohio for the night.. Stay at the Hampton Inn. $109 *250 miles*

Oct 14 Wed: Driving day to Waynesboro, VA, start of the Parkway. Stay at the Hampton Inn. $124 *280 miles*

Oct 15 Thurs: This is all Parkway driving with many stops. Stay at the Holiday Inn in Roanoke, VA. $89 *120 miles*

Oct 16 Fri: Mostly Parkway driving with many stops. Stay at the Fairfield Inn in Jonesville NC. $150 *130 miles*

Oct 17 Sat: Mostly Parkway driving with many stops. Stay at the Hampton Inn in Ashville NC. $199 *130 miles*

Oct 18 Sun: Combination of Parkway and the Newfound Gap driving. Stay in Gatlinburg, TN. The 18th and 19th stay at the Park Vista Doubletree Inn. $144/night *195 miles*

Oct 19 Mon: We will tour Cades Cove and other Smokey Mountain sites with some Downtown time.

Oct 20 Tues: This is a driving day to Horse Cave KY. Stay At the Holiday Inn Express. $89 *230 miles*

Oct 21 Wed: Home. $0 *150 to 200 miles*

We are hitting the Parkway at it's peak Fall colors so the rates are a bit higher. I was able to get some breaks so it wasn't out of sight. Most of the rooms are in blocks and you have to call your own reservations in. I did guarantee Tues the 13th and Tues the 20th on the club card . For the other Motels call me and I will send you a list of tele-phone numbers and codes. Please get all your rooms reserved by September 5th. The blocks end soon after this.

- Phil Sutton 812 336 8672

Permanence of Allegheny Metal

Rustless Steel. Never needs polishing. Clean with a damp cloth. Seems too good to be true, right? Maybe. While the Model A did introduce some stainless trim pieces, if a completely stainless steel bodied "A" was ever produced has some mystery. The Ford Garage back in 2008 claims one still exists with some pretty convincing photos to back it up. What is true is the 1936 Ford, 1960 T-Bird, and 1966-67 Continental where made in collaboration with Allegheny Ludlum to promote the use of this metal. I had the chance to see one such collection of all three at the Crawford Auto Museum in Cleveland back in the 2000's. Very impressive. Highly recommend visiting that museum, by the way.

Claiming the need to raise cash, Allegheny is going to auction off a collection of three on September 5th in Auburn, IN with no reserve. Not so 'permanent' after all. Sad for them, happy times for one lucky person!

-Tim Diehn

November 9, 1931 TIME 51

LOOK CLOSELY—*every bit of metal you can see here is Allegheny Metal. It cleans as easily as glass.*

Will next year's cars be like this?

GREATER PROTECTION *is secured from Allegheny Metal, for it's far stronger than mild steel. It's permanently bright.*

We just bought this special job with the body entirely of Allegheny Metal.

OUR car will never need paint or polish. It will never grow dull because the body, from bumper to bumper, is Allegheny Metal.

You've seen hundreds of Fords with bright parts of Allegheny Metal—headlamps, radiator shell and trim. You've seen these parts stand years of abuse with never a sign of rust.

Can you picture, then, a car entirely of Allegheny Metal? Allegheny Metal is so immune to corrosion that dairies use it to safeguard your milk . . . that restaurants prepare your food on it . . . that hospitals find it safest for clinical equipment.

Allegheny Metal is far stronger than mild steel. It has no thin plated surface to wear or peel. Nothing to chip. It's the same everbrilliant metal all the way through.

These remarkable qualities of Allegheny Metal were developed in our laboratories. Research started with a formula still used by many companies. Now we've developed it to the highest point yet reached.

Perhaps you need the permanence of Allegheny Metal in your products or your processes. Write for Bulletin A—it gives a complete description of this metal.

QUICK FACTS

1. Resists more corrosive agents than any other alloy.
2. Can be drawn, stamped, machined, spun, cast, forged.
3. Far stronger than mild steel.
4. Will take any finish from dull to mirror.
5. Is non-magnetic.
6. Resists denting and abrasion.
7. Is readily annealed; may be welded and soldered.
8. Is produced in practically all commercial forms.
9. Immune to chemical reactions resulting from cooking and preparation of food . . . does not affect flavor, color or purity of any food.

ALLEGHENY STEEL COMPANY, Brackenridge, Pa., *Offices:* New York, Buffalo, Chicago, Cincinnati, Cleveland, Detroit, Philadelphia, St. Louis, Washington, D. C., Milwaukee, Los Angeles. *Warehouse Stocks:* Joseph T. Ryerson & Son, Inc.—Chicago, Cleveland, Milwaukee, St. Louis, Cincinnati, Detroit, Buffalo, Boston, Jersey City, Philadelphia . . . *In Canada:* Samuel, Son & Co., Ltd., Toronto.

ALLEGHENY METAL

Manufactured pursuant to license from the Chemical Foundation, Inc., under basic patents No. 1,316,817 and No. 1,339,378

Other Tour News

July 11 - *Picnic at Brown County State Park* - Lawson/Sutton- Picnic at Brown County Park. Join us at our annual Brown County picnic at the Brown County State Park Walnut Shelter house. Bring your favorite covered dish, either a side dish or a dessert. The club will provide meat and drinks. We will eat at **12:00 noon**. Bring folding chairs for your comfort.

July 22 - *Dine at the Ford Garage* – Ronnie Lawson and Ms. Katy - 13193 Levinson Ln #100, Noblesville, IN 46060. This is on a Wednesday. We will be leaving Marathon Gas Station at the junction of 25th street, HWY 46, HWY 9 at **10:30 AM**. The Marathon Gas stations address is 2650 IN-9, Columbus, IN 47203, if you want to put it into your GPS. The Ford Garage does not take reservations it is first come first serve. Call me 812-343-2434 and let me know if you are coming.

2020 Sponsored Tour and Event Schedule

~~April 2-4 MARC Membership Meet, Swan Lake Resort, Plymouth, IN (Sutton)~~
~~April 9 Membership Meeting - Sirloin Stockade 5:30 Dinner, 6:30 meeting~~
~~April 18 Spring Mill State Park Pancake Breakfast at the Inn/Cobweb Tour (K. Sullivan)~~
~~April 25 Pancake Breakfast, Bloomington, IN (Sutton/Lawson)~~
~~April 26 Columbus MARC Swap Meet 4-H Fairground (Morlock)~~

~~May 4-6 Spring Tour to Berlin Grand Hotel, Berlin, OH (Howell)~~
~~May 9 Ron and Katy Lawson Wedding, North Vernon, IN (Lawson)~~
~~May 14 Membership Meeting - Sirloin Stockade 5:30 Dinner, 6:30 meeting~~
~~May 20 Stream Cliff Farms and Winery, Commiskey, IN (Meyers)~~
~~May30-Jun8 MARC National Meet, Oshkosh, WI (Lawson/Sutton)~~

~~June 13 Tour de Cluck, Wagner's Village Inn at 12:30, Oldenburg, IN (Pitcher)~~
~~June 13 Pancake Breakfast, Bloomington, IN (Sutton/Lawson)~~
~~June 27 Hardy Lake Breakfast and Car Show (Lawson)~~

July 11 Picnic at Brown County Park (Sutton, Lawson, Howell)
July 22 Dine at Ford Garage, Noblesville, IN, Lunch 1pm (Lawson)
~~July 25 Pitch-in Dinner and movie at The Historic Artcraft Theatre in Franklin (Daine)~~
July 31-Aug1 Clifty Falls Inn, Madison, IN (Sutton)

~~August 7-9 Keck-Gonnerman Steam Show, Mount Vernon, IN (Morlock)~~
~~August 22 Tri-club picnic at Johnson County Park, Indiana Live Steamers (Lawson)~~

Sept 10 Membership Meeting - Sirloin Stockade 5:30 Dinner, 6:30 meeting
Sept 12 Fire Truck Show, Seymour, IN (Ryder)
~~Sept 19 North Vernon Airport Day (Huddleston)~~
Sept XX Trip to Shipshewana, IN (K. Sullivan)

October 3 "The Fords meet the Hudsons" at Ed Dathe's home (Dathe)
October 8 Membership Meeting - Sirloin Stockade 5:30 Dinner, 6:30 meeting
Oct 13-20 Fall Tour - Southern IL, KY, MO, IN (Sutton)
October 31 Fall Foliage Tour (Jack/Linda Sullivan)

November 12 Membership Meeting and Election of Officers - Sirloin Stockade 5:30 Dinner, 6:30 meeting

December 13 Christmas Party at Pines with Entertainment, 4pm, (Club Officers)

2020 On Your Own Tours

Please verify yourself if 'On Your Own' Tour is still on. The Club is not updating this list.

March 20-21	Chickasha Swap Meet, Chickasha, Oklahoma
March 21	Dine at Ford Garage, Noblesville, Lunch 1pm (Howell)
~~April 4~~	~~Franklin County Antique Machinery Swap Meet, Brookville, IN~~
~~April 18~~	~~Cobweb Tour, Metamora, IN (Greenwood Club)~~
May 8-10	Wings over Muscatatuck Migratory Bird Festival
May 15-16	Hoosier Vintage Wheels Swap Meet and Car Show, Johnson County Fairgrounds Franklin
~~May 25~~	~~Progressive dinner (Greenwood Club)~~
~~May 31-Jun 5~~	~~MAFCA Midwest Regional Meet, Overland Park, Kansas~~
June 6	Elizabethtown Parade - lineup 10am, parade 11am. Contact Gale Greathouse 812-390-9857
June 6	Columbus Municipal Airport Aviation Day and Car Show
June 7	Lawrenceburg Flea Market
June 9	EEA Chapter 1328, B17 and B25 Bomber visit, North Vernon, IN
~~June 21-26~~	~~MAFCA National Convention, Yo Ranch Resort, Kerrville, TX~~
August 6-9	72nd Pioneer Engineers Club Reunion, Steam Engines, Rushville, IN
August 6-8	Michigan Round-Up, Auburn Hills, MI (Oakleaf Region MARC)
August 17-20	Indiana Grand Auto Tour, Columbus, IN
August 20-23	Greensburg Power of the Past, Decatur County Fairgrounds, Greensburg, IN
August 26-29	Tri-state Gas Engine and Tractor Show, Jay County Fairgrounds, Portland, IN
August 29	Bartholomew County Historical Society, Reeves Festival @ Breeding Farm
Sept 10-13	White River Valley Antique at Elnora
Sept 12-13	Brown County Antique Machinery Show and Flea Market
Sept 12-13	Scottish Festival, Columbus, IN
Sept 12-13	Old Car Festival at Greenfield Village, Dearborn, MI
Sept 18-19	10th Annual Model A Day Gilmore Car Museum, Hickory Corners, MI
Sept 18-19	Hoosier Vintage Wheels Swap Meet and Show, Johnson County Fairgrounds
Sept 19	Hot Rods and Rock & Roll, Columbus IN
Sept 24-27	Franklin County Antique Machinery Show, Brookville, IN
Oct 4-6	Newport Antique Hill Climb, Newport, IN
~~Oct 7-10~~	~~Hershey Swap Meet, Hershey, PA~~
Oct 23-25	Fall Foliage Tour (Greenwood Club)

2020 Club Officers & Committees

President
Ron Lawson
812-343-2434
ronlaw69@yahoo.com

Vice President
Roger Dean
812-278-6696
Deanhome.dean@gmail.com

Secretary
Nora Dean
812-592-7417
Deanhome.dean@gmail.com

Treasurer/Tour Master
Phil Sutton
812-336-8672
pgsutton@indiana.edu

Board of Directors
Wayne Arnholt
812-522-1007
aatruckway@aol.com
Tim Diehn
812-374-2882
timdiehn@yahoo.com
Ron Huddleston
812-392-2110
ronswift@frontier.com
Dennis Meyers
317-862-4066
dennis@meyerfinancialstrategies.com

Web Master
John Prohaska
812-350-8780
modelacolumbus@gmail.com

Newsletter/Historian/Membership
Tim Diehn
812-374-2882
modelacolumbus@gmail.com

Swap Meet Chairman/Club Reporter
Larry Morlock
812-371-6628
l.morlock@att.net

Care and Concern Committee
Linda Sullivan
812-523-3674
roadsterman1929@yahoo.com

Going Places is the official publication of the Columbus Model A Restorers Club Region and the Columbus Model A Ford Club of America Chapter. The general purpose shall be to encourage the members to acquire, preserve, restore, exhibit and make use of the Model "A" Ford vehicle, model years 1928 through 1931 and all things pertaining to the Model "A" Ford, including literature, technical and historical information and to promote the introduction of ideas and fellowship for the enjoyment of its members.

This publication is mailed or emailed to members and editors of similar publications monthly. Meetings are the second Thursday of the month. We invite members to submit articles containing technical Model A information and other interesting tidbits for publication in this newsletter.

Classifieds

Model A Parts for Sale

30/31 Radiator in very good condition

Working Horn

Dual Carb Setup

Model A News magazines complete from 1978 to present

Call Richard Hite at 317-535-1003

Late 1930 Tudor with original engine

Nice Sparton Horn

Nice Stewart-Warner Horn

1930/31 Original top two hood pieces in mint primed condition. (Belonged to Fred Thompson)

1930/31 Original Coupe Roll Down Window Moulding in mint primed condition

1930/31 Original full set of Coupe interior trim Mouldings in mint primed condition

1930/31 Original near show quality matching Headlight Buckets with matching etched Lenses

1930/31 Reproduction Quail Radiator Cap

1930/31 Original Restored Gas Cap

Two nice 19 inch 1930/31 Wheels

Usable 1930/31 Radiator Shell that has good potential to be better

I also have a vintage Sparton Original Siren that I don't know much about

I also have my 2000 Mazda Miata Roadster for sale

Jerry Miller
(317) 460-4307
millerltd1@gmail.com